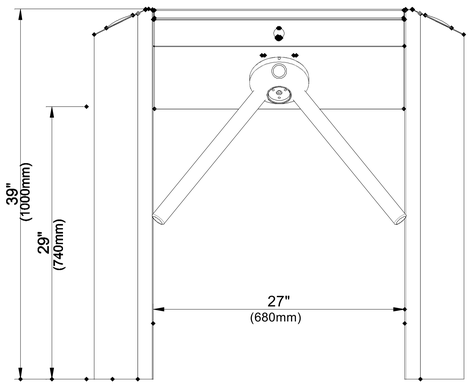

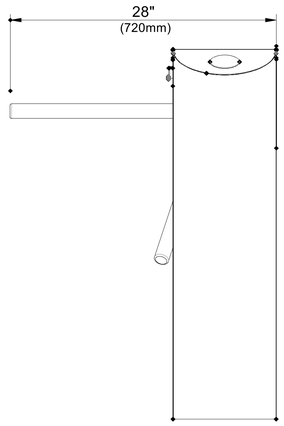

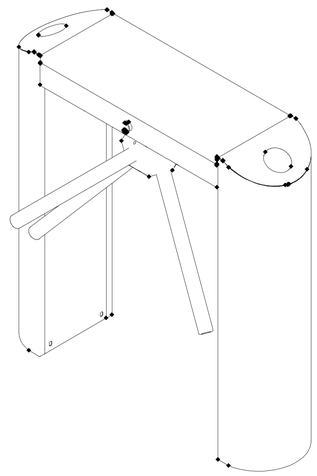

TURNSTILE BOTTOM VIEW

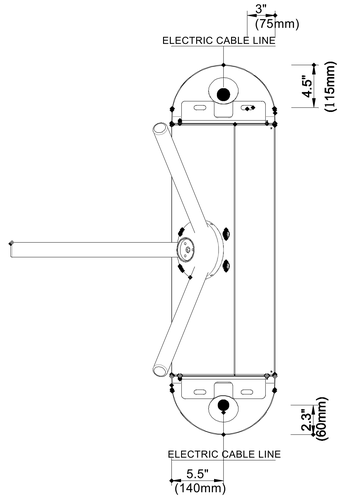

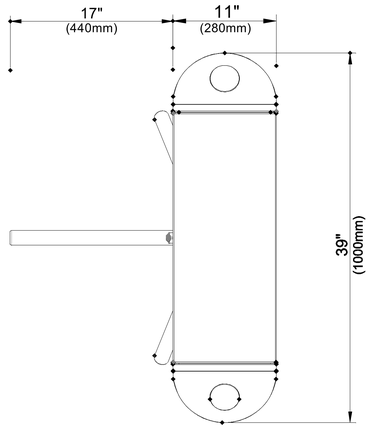

TECHNICAL DRAWING DIMENSIONING	REVISION
TANSA SINCE 1982 www.tansasecurity.com	
DRAWING MODEL LTT 303E	A3
SCALE : 1/10	PAGE 1 / 1